DRC
PZ26-12000001
04/01/2026

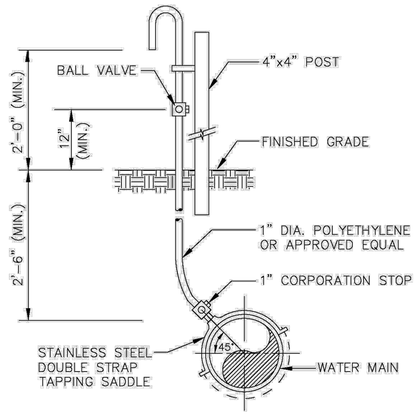

SAMPLE POINT (MAIN)

ALL D.I.P. TO BE PAINTED BLUE ON TOP HALF OF PIPE.

ENGINEERING STANDARDS 2025

REVISIONS BY	DATE	ENGINEERING DIVISION CITY OF POMPANO BEACH	SAMPLE POINT (MAIN)	DATE: MAY 2022 DWG. NO. 100-1
S.S.	04-2005	SCALE: N.T.S.		

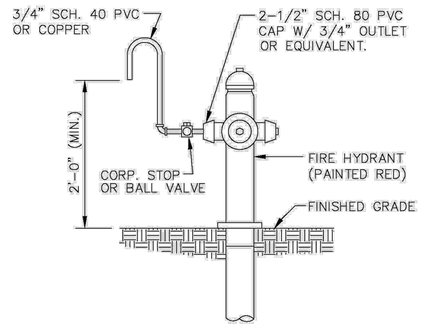

SAMPLE POINT (HYDRANT)

ALL POMPANO BEACH HYDRANTS SHALL BE PAINTED RED.

ALL D.I.P. TO BE PAINTED BLUE ON TOP HALF OF PIPE.

ENGINEERING STANDARDS 2025

REVISIONS BY	DATE	ENGINEERING DIVISION CITY OF POMPANO BEACH	SAMPLE POINT (HYDRANT)	DATE: MAY 2022 DWG. NO. 101-1
S.S.	04-2005	SCALE: N.T.S.		

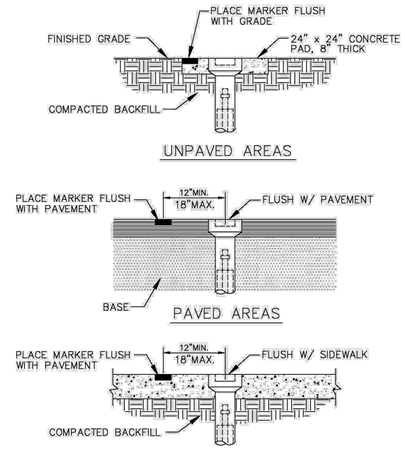

VALVE BOX SETTINGS

ENGINEERING STANDARDS 2025

REVISIONS BY	DATE	ENGINEERING DIVISION CITY OF POMPANO BEACH	VALVE BOX SETTINGS	DATE: MAY 2022 DWG. NO. 102-1
S.S.	04-2005	SCALE: N.T.S.		

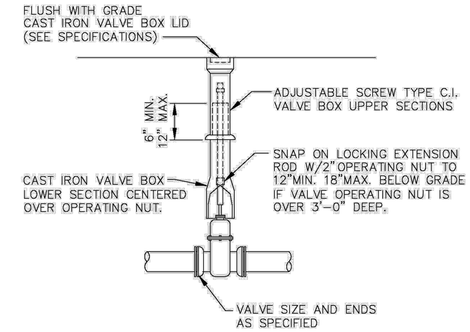

GATE OR PLUG VALVE SETTING

USE MEGALUGS AT ALL PIPE JOINTS

ALL D.I.P. TO BE PAINTED BLUE ON TOP HALF OF PIPE.

ENGINEERING STANDARDS 2025

REVISIONS BY	DATE	ENGINEERING DIVISION CITY OF POMPANO BEACH	GATE OR PLUG VALVE SETTINGS	DATE: MAY 2022 DWG. NO. 103-1
S.S.	04-2005	SCALE: N.T.S.		
T.W.	11-2007			

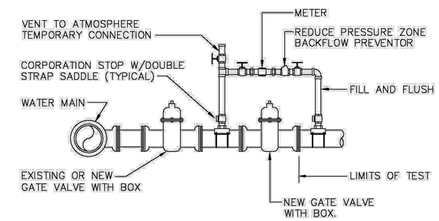

METHOD "B"

NOTES:

1. WATER MAIN TO BE PRESSURE TESTED AND DISINFECTED ACCORDING TO BROWARD COUNTY PUBLIC HEALTH UNIT REGULATIONS, AWWA, AND MUNICIPAL SPECIFICATIONS IN EFFECT.
2. BACTERIOLOGICAL TESTS ARE TO BE PERFORMED BY THE CONTRACTOR AND AN APPROVED TESTING LABORATORY.
3. REMOVE TEMPORARY CONNECTION AT SADDLE ON NEW MAINS AFTER FILLING AND FLUSHING HAS BEEN COMPLETED AND REPLACE WITH BRASS PLUG
4. PROVIDE ALL NECESSARY THRUST BLOCKS OR OTHER RESTRAINTS.
5. FILLING AND FLUSHING LOCATIONS SHALL BE COORDINATED BY THE CONTRACTOR, ENGINEER, AND CITY.
6. VENT TO ATMOSPHERE SHALL REMAIN OPEN DURING ALL PHASES OF PRESSURE TESTING.
7. AFTER COMPLETION FILL AND FLUSH CONNECTION
8. USE MEGALUGS AT ALL PIPE JOINTS

FILLING AND FLUSHING CONNECTION

ALL D.I.P. TO BE PAINTED BLUE ON TOP HALF OF PIPE.

ENGINEERING STANDARDS 2025

REVISIONS BY	DATE	ENGINEERING DIVISION CITY OF POMPANO BEACH	FILLING / FLUSHING CONNECTION	DATE: MAY 2022 DWG. NO. 104-1
S.S.	04-2005	SCALE: N.T.S.		
T.W.	11-2007			
S.S.	01-2012			

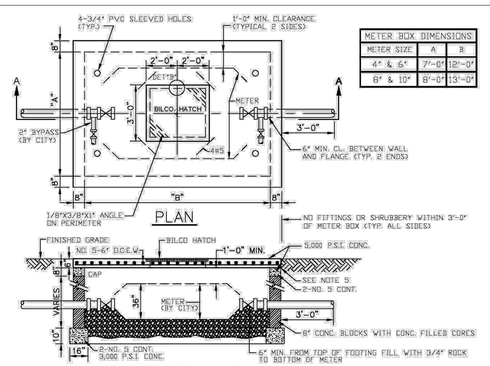

METER BOX DIMENSIONS METER SIZE	A	B
4" & 6"	7'-0"	12'-0"
8" & 10"	8'-0"	13'-0"

NOTES:

1. THIS STRUCTURE & LID ARE FOR NON-TRAFFIC BEARING ONLY.
2. DO NOT CONSTRUCT METER BOX UNTIL AFTER METER IS IN PLACE.
3. CENTER BOX AROUND METER.
4. DO NOT TIE CONCRETE LID TO CONCRETE WALLS.
5. TOP OF LID TO BE @ FINISH GRADE ELEV.
6. CUT OUT REPLACEABLE 10" SQUARE OVER EACH READING HEAD & FASTEN W/CHAIN.
7. FITS NEPTUNE R450 ANTENNA.
8. BILCO HATCH MODEL J-AL OR JD-AL OR EQUAL

LARGE METER BOX

ENGINEERING STANDARDS 2025

REVISIONS BY	DATE	ENGINEERING DIVISION CITY OF POMPANO BEACH	LARGE METER BOX	DATE: MAY 2022 DWG. NO. 105-1
T.W.	03-2008	SCALE: N.T.S.		
S.S.	01-2012			
S.S.	11-2012			

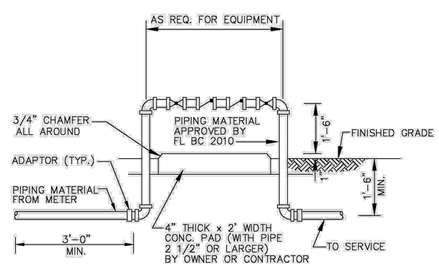

BACKFLOW PREVENTER

USE MEGALUGS AT ALL PIPE JOINTS 3" AND LARGER
PLEASE SEE METER INSTALL DIMENSION LIST ON STANDARD NO. 106-4
SMALL UNITS UNI-STRUT SUPPORT

ENGINEERING STANDARDS 2025

REVISIONS BY	DATE	ENGINEERING DIVISION CITY OF POMPANO BEACH	BACKFLOW PREVENTER	DATE: MAY 2022 DWG. NO. 106-1
T.W.	04-2008	SCALE: N.T.S.		
S.S.	03-2009			
S.S.	11-2012			
S.S.	01-2013			

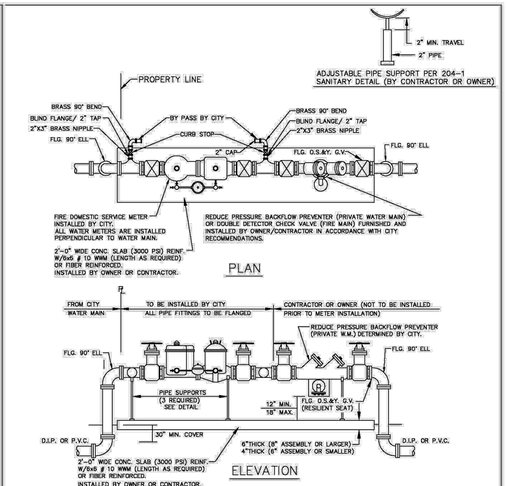

MASTER METER AND BACKFLOW DEVICE DETAILS FIRE AND DOMESTIC COMBINED SOURCE

NOTES

1. THE BACKFLOW PREVENTOR FOR THE BY-PASS SHALL BE DDCV OR RPZ.
2. PLEASE NOTE THAT WATER METERS 3" AND LARGER ARE SUBJECT TO AN APPROXIMATE ORDER LEAD TIME OF 60 TO 75 DAYS AFTER FULL PAYMENT. PLEASE CONTACT CUSTOMER SERVICE AT 954-786-4637 TO ARRANGE FOR METER PROCUREMENT AND INSTALLATION.
3. USE MEGALUGS AT ALL PIPE JOINTS
4. PLEASE SEE METER INSTALL DIMENSION LIST ON STANDARD NO. 106-4

ENGINEERING STANDARDS 2025

REVISIONS BY	DATE	ENGINEERING DIVISION CITY OF POMPANO BEACH	MASTER METER AND BACKFLOW DEVICE	DATE: MAY 2022 DWG. NO. 106-2
S.S.	05-2011	SCALE: N.T.S.		
S.S.	11-2012			
S.S.	12-2013			
S.S.	11-2016			

DRC
PZ26-12000001
08/05/2026

DRC
PZ26-12000001
05/20/2026

KEITH
7200 West Atlantic Blvd.
Pompano Beach, FL 33060
PH: (954) 788-3400
Florida Engineering Business License: CA7928
Florida Surveyor and Mapper Business License: LB6860
Florida Landscape Architecture Business License: LC26000457

REVISIONS

NO.	DESCRIPTION	DATE

PRELIMINARY PLAN NOT FOR CONSTRUCTION

THESE PLANS ARE NOT FULLY PERMITTED AND ARE SUBJECT TO REVISIONS MADE DURING THE PERMITTING PROCESS.

RESPONSIBILITY FOR THE USE OF THESE PLANS PRIOR TO OBTAINING PERMITS FROM ALL AGENCIES HAVING JURISDICTION OVER THE PROJECT WILL FALL SOLELY UPON THE USER.

ISSUE DATE:	02/25/2026
DESIGNED BY:	CJM
DRAWN BY:	CJM
CHECKED BY:	CTA
BID-CONTRACT:	

This item has been digitally signed and sealed by CHRISTOPHER T. ANDREONI, P.E. on the date adjacent to the seal.

CHRISTOPHER T. ANDREONI LICENSE No. 84184 STATE OF FLORIDA PROFESSIONAL ENGINEER

Signature must be verified on any electronic copies.

2026.02.25 15:18:50-05'00'

CHRISTOPHER T. ANDREONI, P.E.
FLORIDA REG. NO. 84184
(FOR THE FIRM)

CLIENT

RP POMPANO LLC

PROJECT

DOWNTOWN POMPANO - PHASE 1 - INFRASTRUCTURE IMPROVEMENTS

SHEET TITLE

WATER AND SEWER DETAILS

SHEET NUMBER CU-501

PROJECT NUMBER 15083.00

STATUS: PRELIMINARY

Plotted by: cmatthews On 2/25/2026 9:04 AM

Drawing name: H:\15083.00 - Downtown Pompano - RP Development LLC\Engineering\Cadd\Phase I (Infrastructure)\15083.00-CU-SXX-PH1.dwg